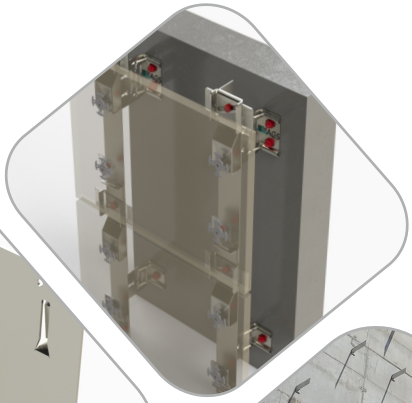

Passive ventilated facade systems

AGS Sp. z o.o.

+48 795 441 145

biuro@ags.org.pl

www.ags.org.pl

About us

AGS Sp. z o.o. deals with the design and production of innovative and unparalleled on the market mounting systems for ventilated facades. The proposed passive solutions are distinguished by durability and, above all, safety, which is confirmed by numerous certificates and tests carried out in leading research units.

All fastening systems meet the fire protection requirements, durability standards, taking into account the corrosive category of the environment and the guidelines of Technical Conditions to be met by buildings and their location in terms of thermal insulation of walls, taking into account thermal bridges.

The AGS company is the only company on the Polish market that offers consoles with embossing on the feet, increasing the load capacity of the section by even several dozen percent, and with holes, which effectively reduces the thermal conductivity of the entire connector.

The AGS team consists of experienced specialists focused on continuous development and implementation of innovative and unprecedented research and development (R&D) projects.

AGS has its own machine park, consisting of five specialized numerically controlled lines, ensuring precise management of the production process and a guarantee of the highest quality of the manufactured product.
The automation of the production process ensures a short time of order fulfillment, while allowing the execution of special projects, tailored to the client's expectations.
By working with AGS, you will receive appropriate support at the very beginning of the project. On the basis of the presented documentation, the AGS Technical Team will propose the most optimal solution, taking into account legal, technical and material requirements.

The dynamic development of the company as well as the constant expansion and improvement of the product offer contributed to obtaining the right to protect intellectual property.

Passive system - basic

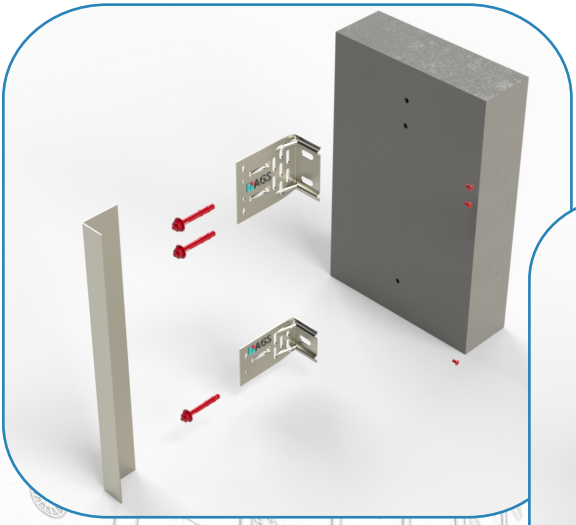

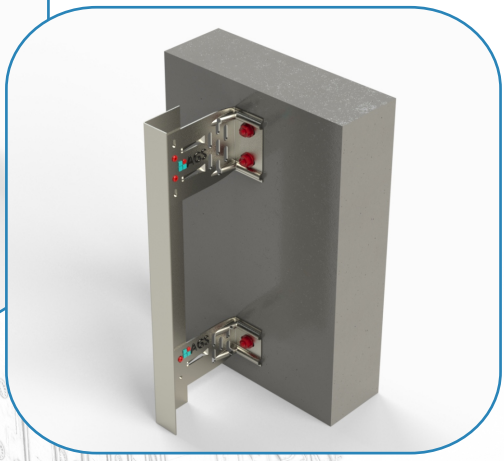

Passive system for riveted plate

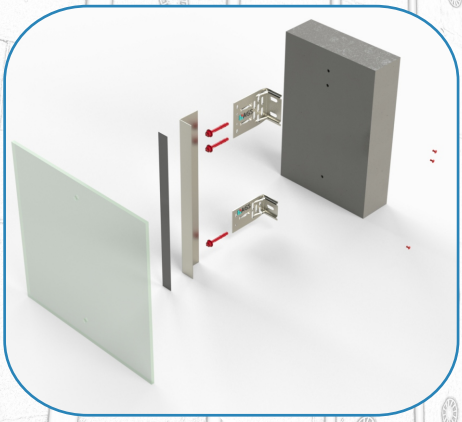

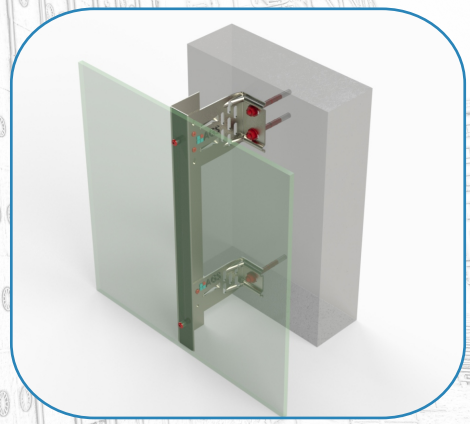

Passive system for glued board

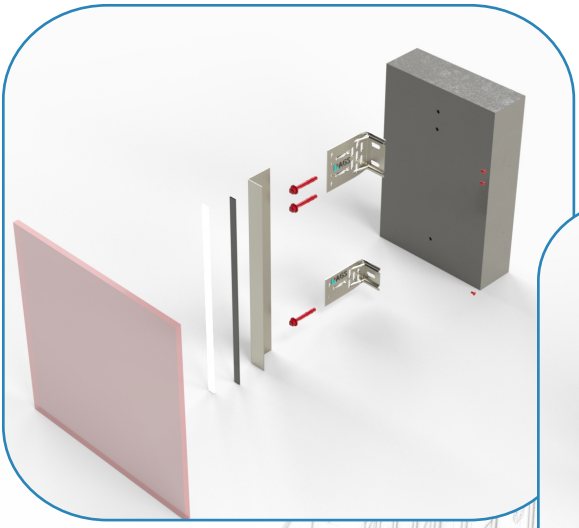

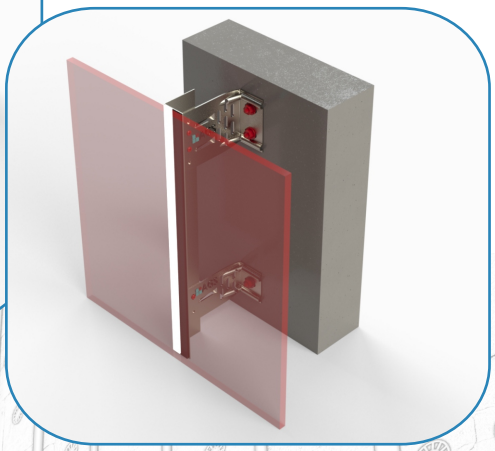

Passive system for concrete - horizontal grate

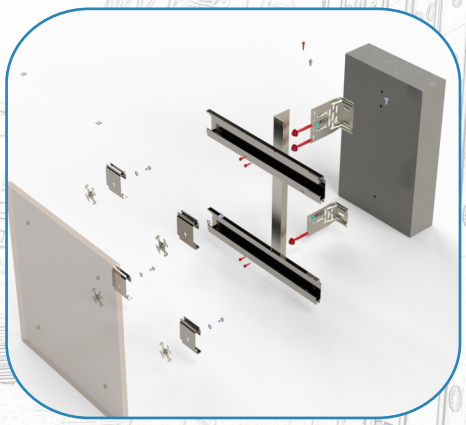

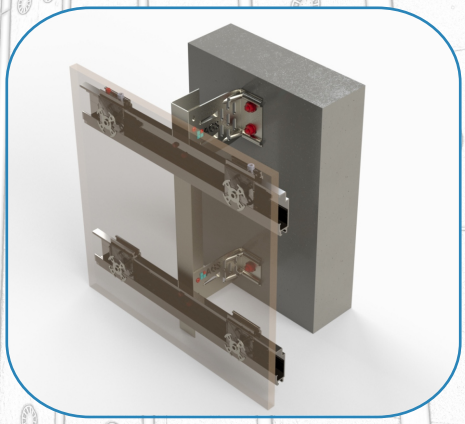

Passive system for undercut anchors

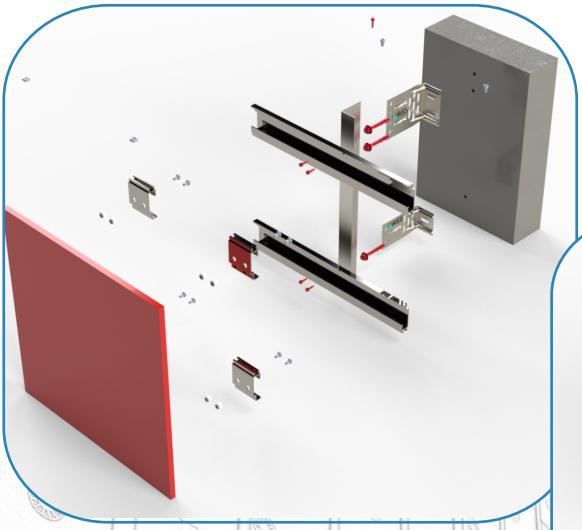

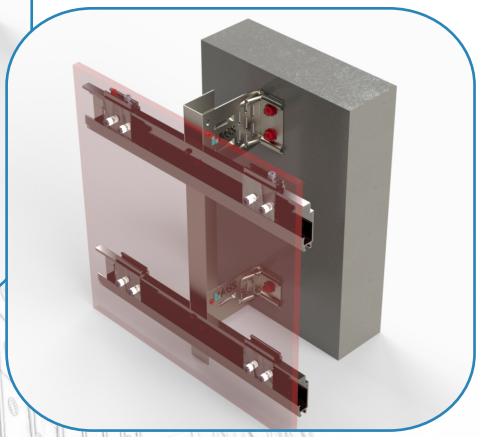

Passive system for wooden substructures

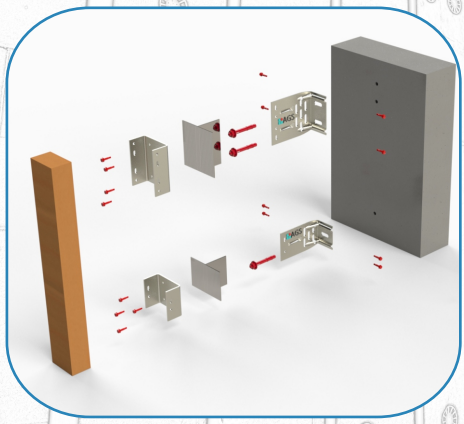

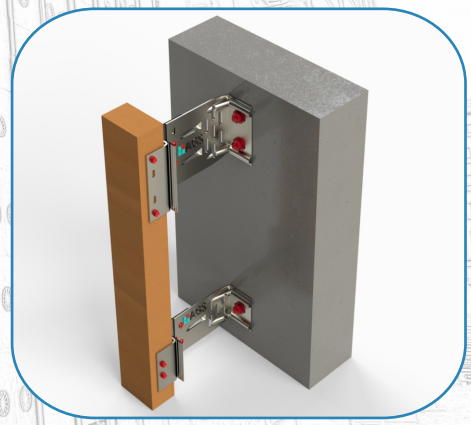

Passive system - hanger

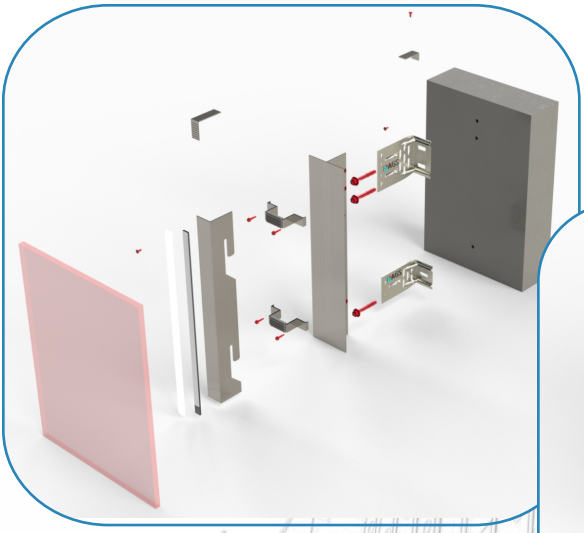

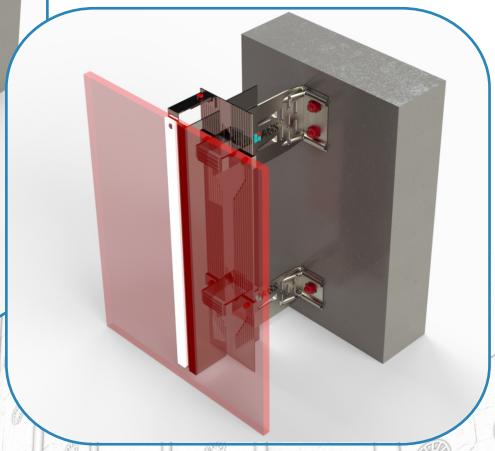

Passive system - suspended, glued

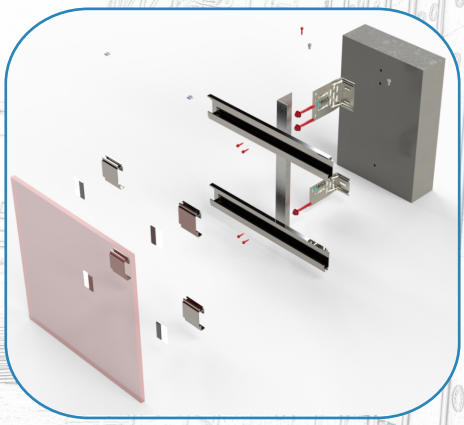

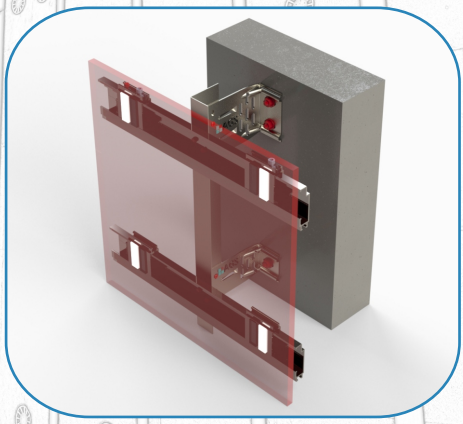

Internal cladding system - glued

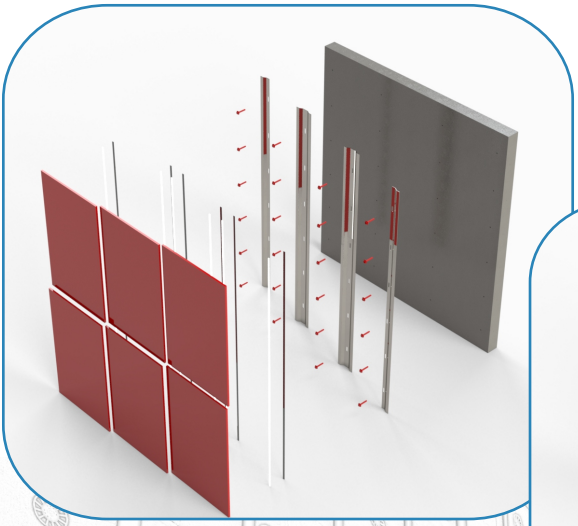

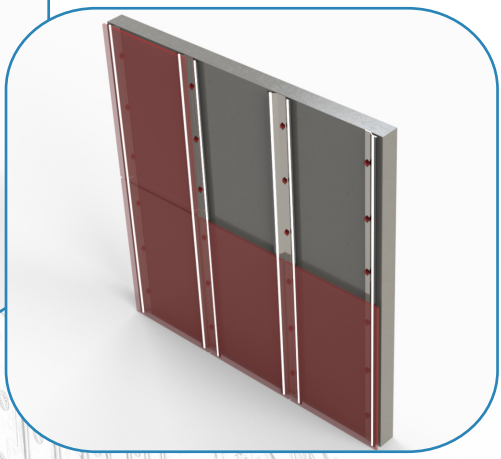

Passive system - joining several boards

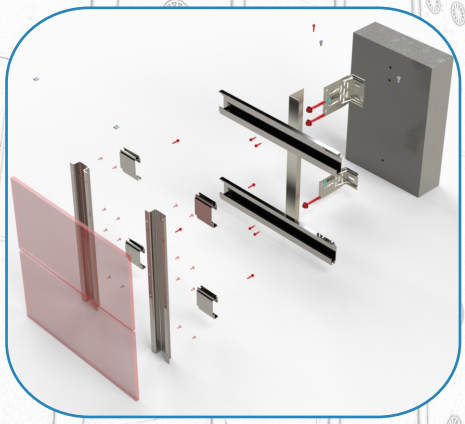

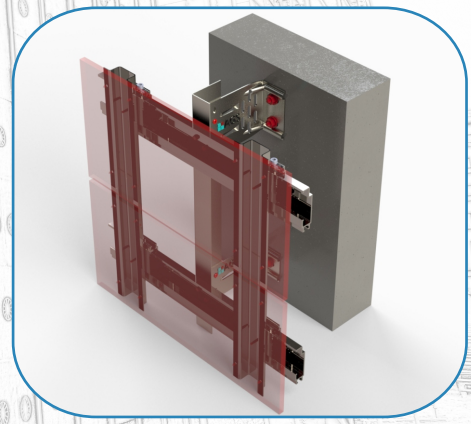

Inter-story mounting system

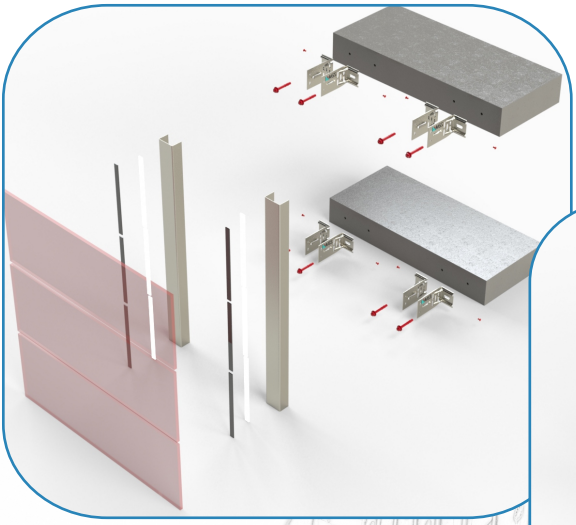

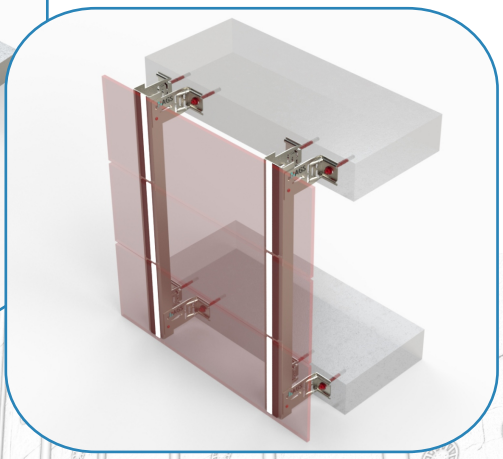

Passive system - horizontal arrangement

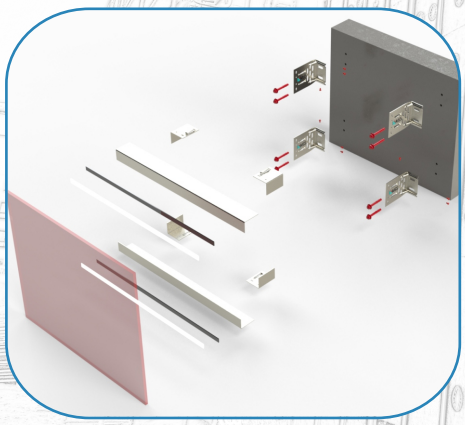

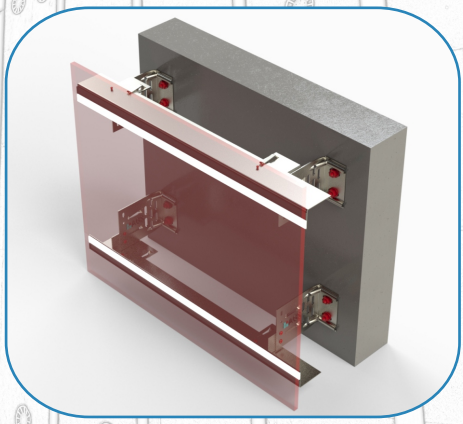

System BIPV 01

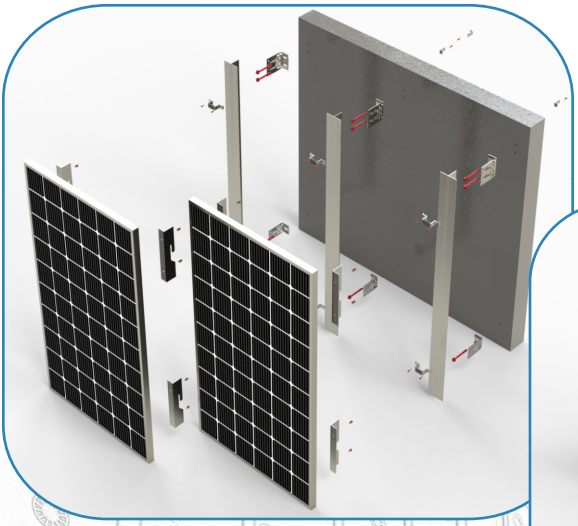

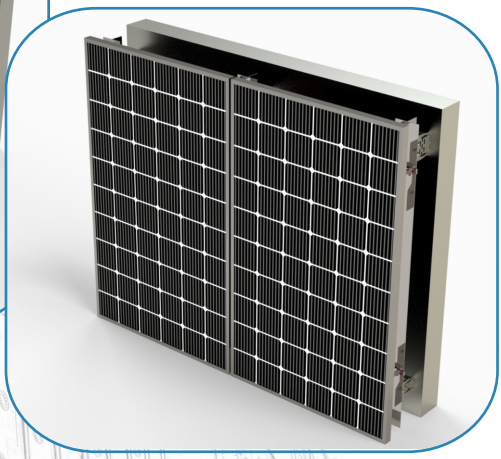

System BIPV 02

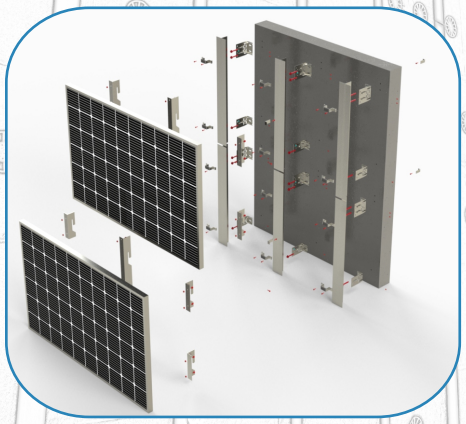

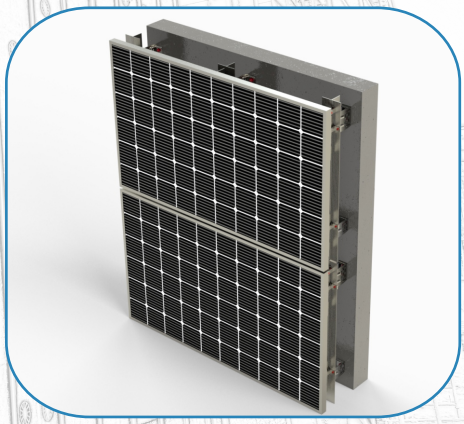

System BIPV 03

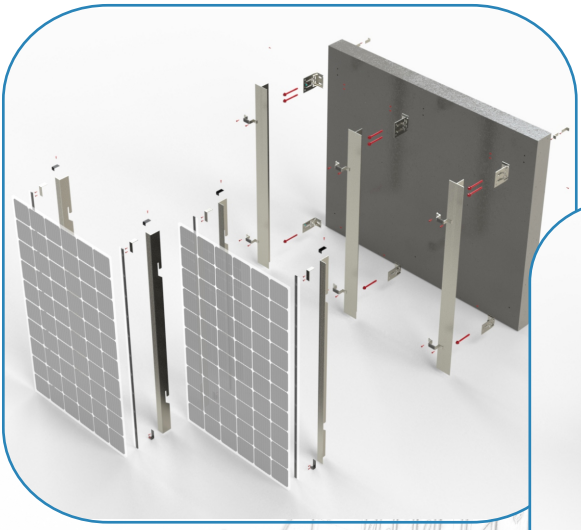

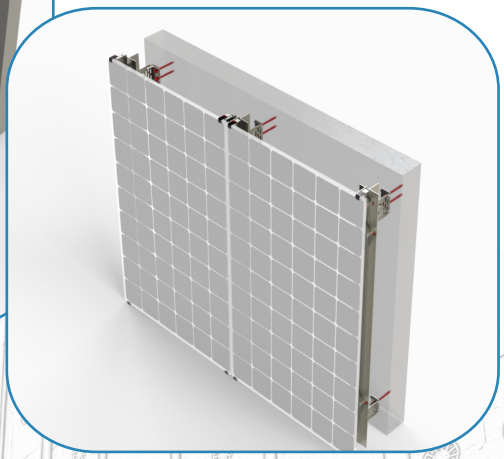

Passive system for concrete cladding

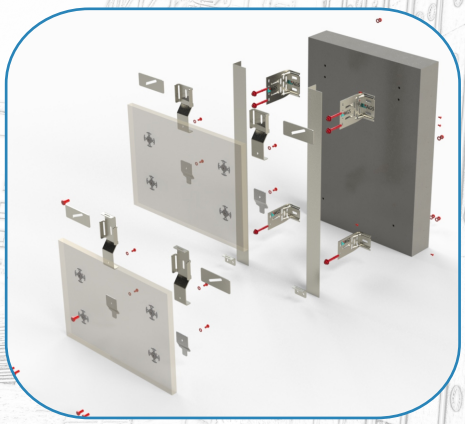

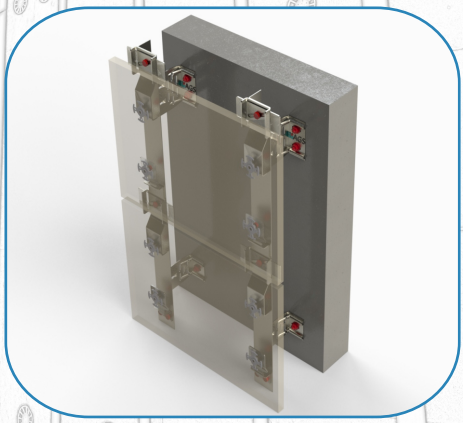

AGS Brackets

AGS HI+ passive consoles (made of GD 350 steel and stainless consoles) are innovative construction connectors that significantly reduce the conduction of cold into the bulding.

Characterized by:

- very low heat conduction coefficient,
- eliminating point thermal bridges.

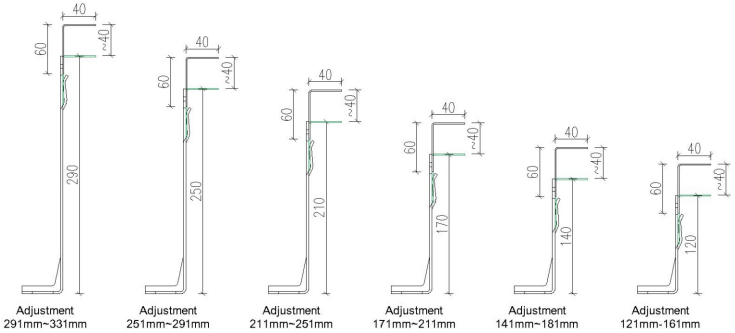

AGS Brackets adjustment options

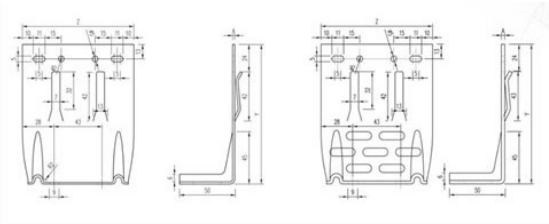

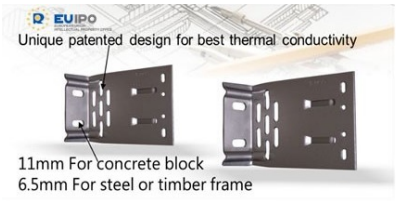

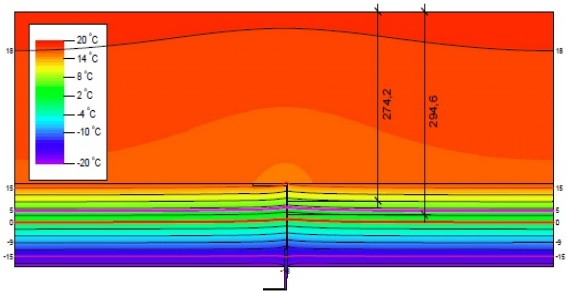

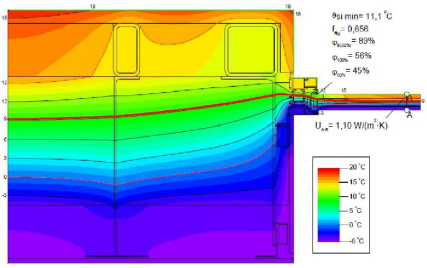

Internal Bracket

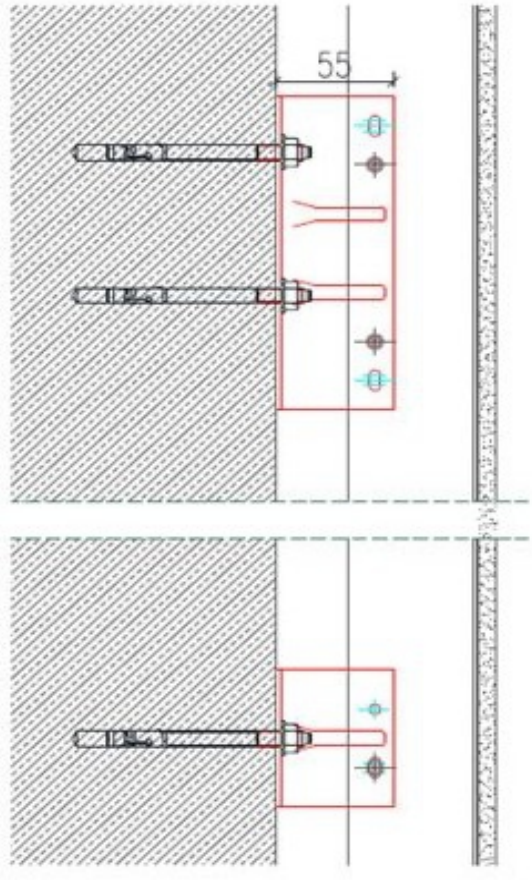

For walls with no insulation required

MAGNELIS INTERNAL CLADDING BRACKETS		
Name	Dim A [mm]	Dim B [mm]
Double Bracket AGS HI+ Z8 55-160-CORRIER	55	160
Single Bracket AGS HI+ Z7 55-70-SLIDING	55	70

Double Bracket

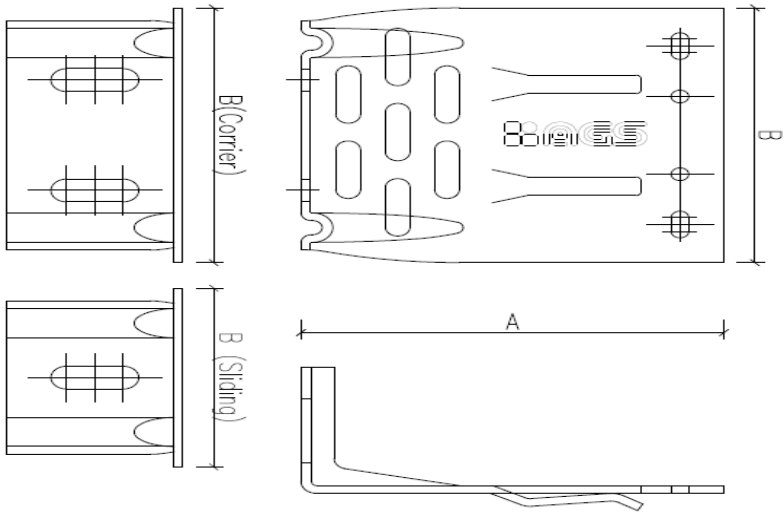

MAGNELIS DOUBLE BRACKETS		
Name	Dim A [mm]	Dim B [mm]
Double Bracket AGS HI+ Z8 120-130-CORRIER	120	130
Double Bracket AGS HI+ Z8 120-160-CORRIER	120	160
Double Bracket AGS HI+ Z8 120-190-CORRIER	120	190
Double Bracket AGS HI+ Z8 140-130-CORRIER	140	130
Double Bracket AGS HI+ Z8 140-160-CORRIER	140	160
Double Bracket AGS HI+ Z8 140-190-CORRIER	140	190
Double Bracket AGS HI+ Z8 170-130-CORRIER	170	130
Double Bracket AGS HI+ Z8 170-160-CORRIER	170	160
Double Bracket AGS HI+ Z8 170-190-CORRIER	170	190
Double Bracket AGS HI+ Z8 210-130-CORRIER	210	130
Double Bracket AGS HI+ Z8 210-160-CORRIER	210	160
Double Bracket AGS HI+ Z8 210-190-CORRIER	210	190
Double Bracket AGS HI+ Z8 250-130-CORRIER	250	130
Double Bracket AGS HI+ Z8 250-160-CORRIER	250	160
Double Bracket AGS HI+ Z8 250-190-CORRIER	250	190
Double Bracket AGS HI+ Z8 290-130-CORRIER	290	130
Double Bracket AGS HI+ Z8 290-160-CORRIER	290	160
Double Bracket AGS HI+ Z8 290-190-CORRIER	290	190

STAINLESS STEEL DOUBLE BRACKETS		
Name	Dim A [mm]	Dim B [mm]
Double Bracket AGS HI+ Z6 120-130-CORRIER	120	130
Double Bracket AGS HI+ Z6 120-160-CORRIER	120	160
Double Bracket AGS HI+ Z6 120-190-CORRIER	120	190
Double Bracket AGS HI+ Z6 140-130-CORRIER	140	130
Double Bracket AGS HI+ Z6 140-160-CORRIER	140	160
Double Bracket AGS HI+ Z6 140-190-CORRIER	140	190
Double Bracket AGS HI+ Z6 170-130-CORRIER	170	130
Double Bracket AGS HI+ Z6 170-160-CORRIER	170	160
Double Bracket AGS HI+ Z6 170-190-CORRIER	170	190
Double Bracket AGS HI+ Z6 210-130-CORRIER	210	130
Double Bracket AGS HI+ Z6 210-160-CORRIER	210	160
Double Bracket AGS HI+ Z6 210-190-CORRIER	210	190
Double Bracket AGS HI+ Z6 250-130-CORRIER	250	130
Double Bracket AGS HI+ Z6 250-160-CORRIER	250	160
Double Bracket AGS HI+ Z6 250-190-CORRIER	250	190
Double Bracket AGS HI+ Z6 290-130-CORRIER	290	130
Double Bracket AGS HI+ Z6 290-160-CORRIER	290	160
Double Bracket AGS HI+ Z6 290-190-CORRIER	290	190

Single Bracket

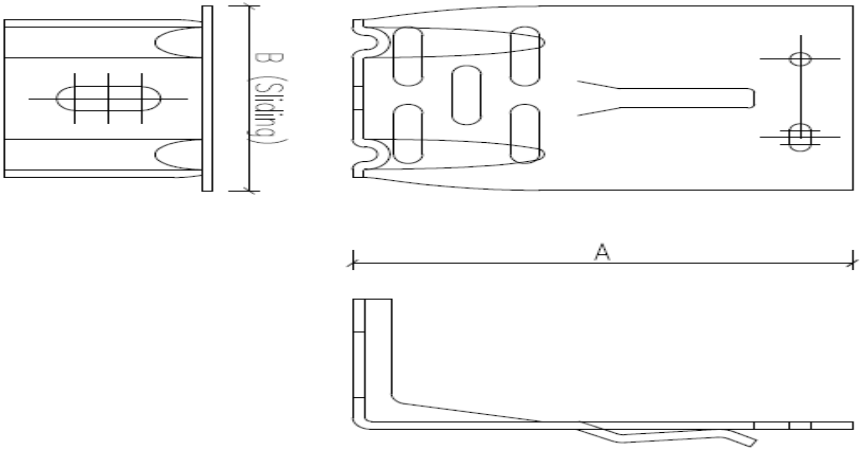

MAGNELIS SINGLE BRACKETS		
Name	Dim A [mm]	Dim B [mm]
Single Bracket AGS HI+ Z7 120-70-SLIDING	120	70
Single Bracket AGS HI+ Z7 140-70-SLIDING	140	70
Single Bracket AGS HI+ Z7 170-70-SLIDING	170	70
Single Bracket AGS HI+ Z7 210-70-SLIDING	210	70
Single Bracket AGS HI+ Z7 250-70-SLIDING	250	70
Single Bracket AGS HI+ Z7 290-70-SLIDING	290	70

STAINLESS STEEL SINGLE BRACKET		
Name	Dim A [mm]	Dim B [mm]
Single Bracket AGS HI+ Z5 120-70-SLIDING	120	70
Single Bracket AGS HI+ Z5 140-70-SLIDING	140	70
Single Bracket AGS HI+ Z5 170-70-SLIDING	170	70
Single Bracket AGS HI+ Z5 210-70-SLIDING	210	70
Single Bracket AGS HI+ Z5 250-70-SLIDING	250	70
Single Bracket AGS HI+ Z5 290-70-SLIDING	290	70

Corner Bracket

MAGNELIS CORNER BRACKET		
Name	Dim A [mm]	Dim B [mm]
Corner Bracket AGS HI+ 130	-	130
Corner Profile AGS HI+ 160	-	160
Corner Profile AGS HI+ 190	-	190
Corner Profile AGS HI+ 70	-	70

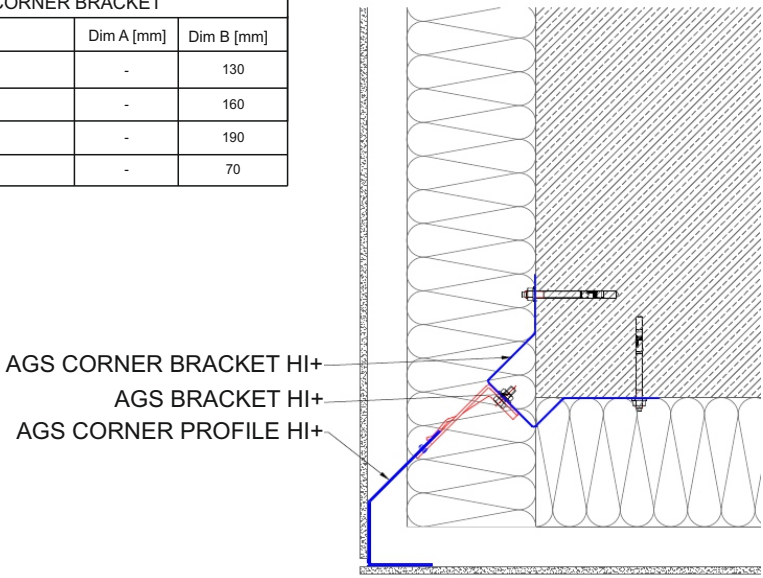

Cassette Cladding Bracket (Profile W1)

Profile W1			
Name	Dim A [mm]	Dim B [mm]	Hight [mm]
Profile W1 including rubber seal	40	103	20

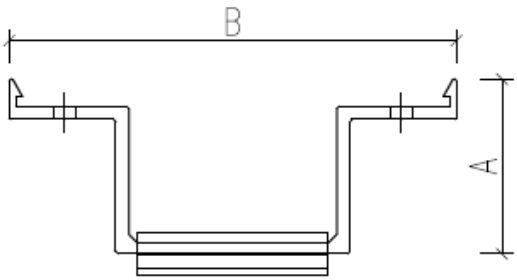

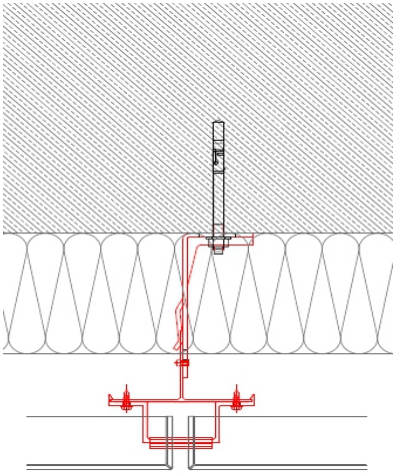

Magnelis® Adapter for Horizontal Cladding Systems

ADAPTER FOR HORIZONTAL CLADDING SYSTEMS			
Name	Dim A [mm]	Dim B [mm]	Length [mm]
Adapter for horizontal cladding systems	100	60	90

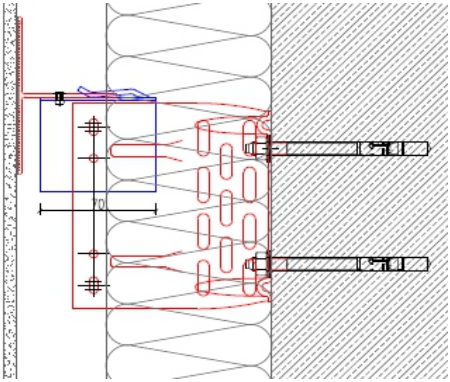

Magnelis® bracket extension

MAGNELIS® BRACKET EXTENSION		
Name	Dim A [mm]	Dim B [mm]
Extension AGS HI+ 130	80	130
Extension AGS HI+ 160	80	160
Extension AGS HI+ 190	80	160
Extension AGS HI+ 70	80	160

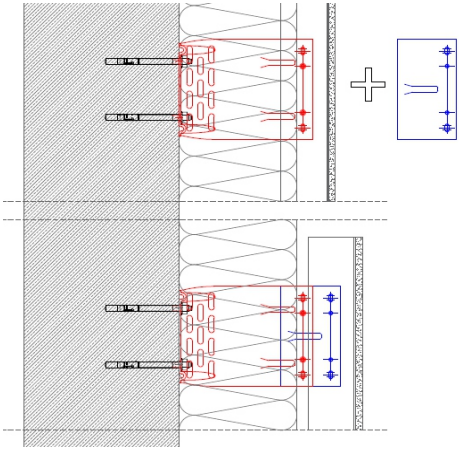

L Shaped Profiles

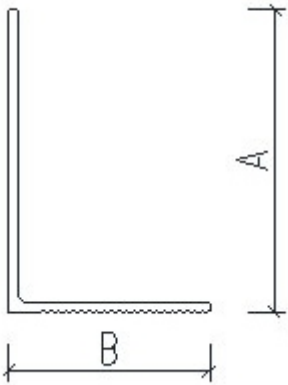

ALUMINIUM L-PROFILES			
Name	Dim A [mm]	Dim A [mm]	Thickness [mm]
L-Profile K1	60	40	2
L-Profile K2	20	40	2
L-Profile hungers	60	40	2
L-Profile 01	40	40	2
L-Profile 02	50	50	2

MAGNELIS L-PROFILES			
Name	Dim A [mm]	Dim A [mm]	Thickness [mm]
L-Profile M1	60	40	1,5
L-Profile M2	60	100	1,5
L-Profile M3	60	40	1
L-Profile M4	60	100	1
L-Profile „Windows”	60	160	1,5

T Shaped Profiles

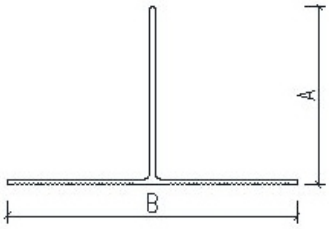

ALUMINIUM T-PROFILES			
Name	Dim A [mm]	Dim A [mm]	Thickness [mm]
T-Profile T1	60	100	2
T-Profile T2	60	40	2
T-Profile T3	92	90	2
T-Profile 01	50	110	2
T-Profile 02	50	120	2
T-Profile 03	70	120	2
T-Profile 04	50	140	2
T-Profile s/steel insert fire rated 120 minutes	60	100	2

Hanger Profiles

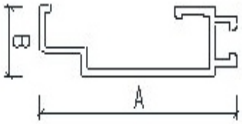

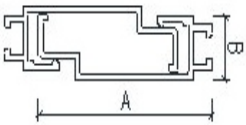

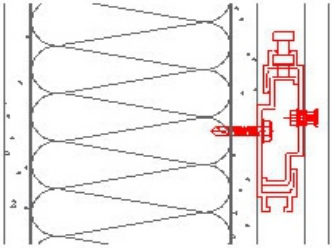

ALUMINIUM HANGER ELEMENTS			
Name	Dim A [mm]	Dim A [mm]	Length [mm]
Hanger A including adjustable screw	74	20	50
	74	20	70
	74	20	100
Hanger A	74	20	50

Other Aluminium Profiles

OMEGA PROFILES			
Name	Dim A [mm]	Dim A [mm]	Thickness [mm]
Omega 1	50	90	2
Omega 2	50	96	2
Omega 3	50	106	2
Omega 4	22	110	2

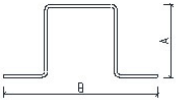

Z-Profile			
Name	Dim A [mm]	Dim B [mm]	Thickness [mm]
Profile Z	79	45	1,8

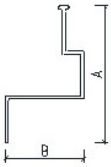

F-Profile			
Name	Dim A [mm]	Dim B [mm]	Thickness [mm]
Profile F	50	40	1,8

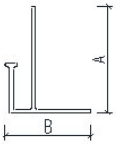

U-Profile			
Name	Dim A [mm]	Dim B [mm]	Thickness [mm]
Profile U	36	39	1,8

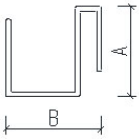

NOTES

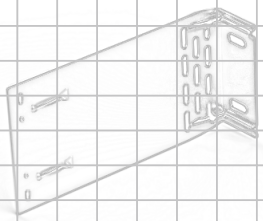

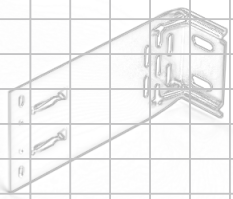

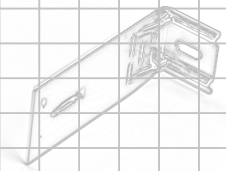

AGS